Hose Basket

Increase the efficiency of your existing pre-conditioned air

The JetAire® Hose Kit allows you to purchase sections in lengths of 10, 15, 20, and 25 feet to extend or replace worn sections of the existing hose.

Hose Retrieval and Storage Kits are available in a variety of different basket styles that attach to the wheel carriage of the passenger boarding bridge to provide convenient hose storage when the pre-conditioned air unit is not in use. Another option is a hose storage reel, which attaches under the bridge to allow easy dispersal and retrieval of the hose after use.

Kits and upgrades are also available for hose couplings.

JBT AeroTech

Contact information:

JBT AeroTech, Jetway Systems®
Service and Support
3100 South Pennsylvania Avenue
Ogden, Utah 84401 USA

Phone: (800) 827-5515
Fax: (801) 629-3266
www.jbtaerotech.com

PC Air

Upgrades & Add-Ons

JBT AeroTech

Hot Gas Bypass Kit

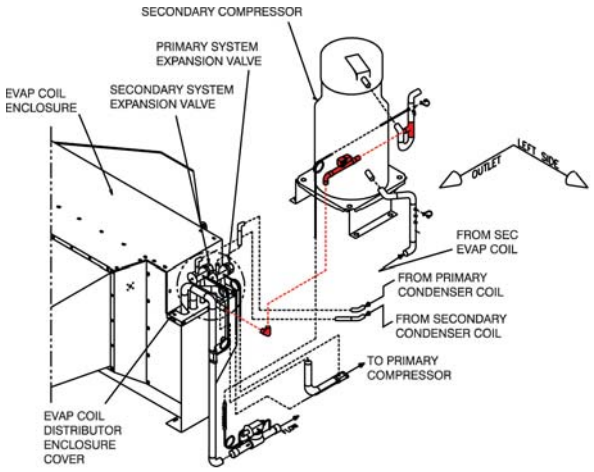

*Area in red indicates kit modification.

Decrease the life cycle costs of your Preconditioned Air unit

With the Hot Gas Bypass Kit you obtain the components to install a hot gas bypass line, solenoid valve, and an adjustable pressure switch. Installation of the kit will reduce compressor cycling and optimize compressor performance by maintaining a higher return suction-pressure to the compressor. This kit also includes solid state, short cycle timers to prevent compressors' rapid start/stop.

Crankcase Heater Kit

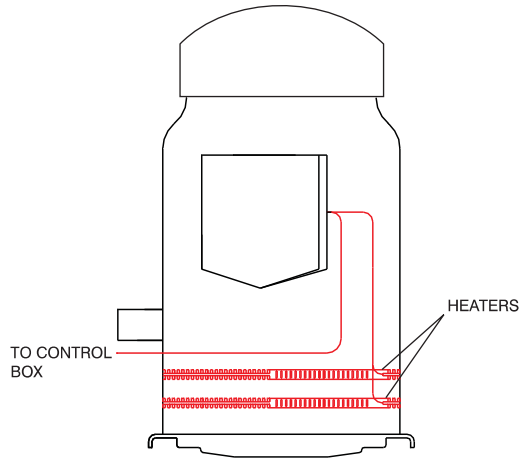

*Area in red indicates kit modification.

Protect the compressors of your Preconditioned Air unit

The Crankcase Heater Kit is designed to inhibit migration of refrigerant into cold compressors and to minimize lubricant deterioration. This kit will keep compressors warm when the unit is turned off.

Kits and upgrades are available for Trane, Danfoss, and Copeland compressors as well as fans, motors, blowers, and coils.

Temperature Auto Control Kit

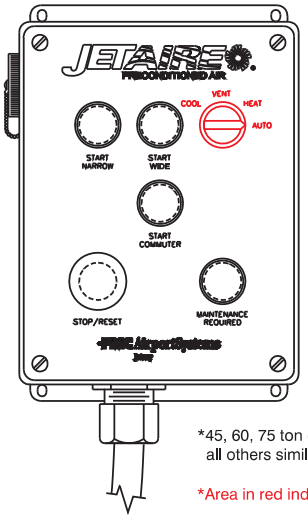

*45, 60, 75 ton control station shown, all others similar.

*Area in red indicates kit modification.

Maximize operator control and functionality of your Preconditioned Air Uny

The Cool/Vent/Heat/Auto Control Kit (Temperature Auto Control Kit), will allow the ramp operator to manually control the unit or to unit in AUTO mode. This modification adds a switch to the remote control station allowing the operator to select COOL, VENT, HEAT, or AUTO mode.

Kits and upgrades are also available for JetAire® controller software.

These kits are available for all Jetway® Apron Drive Passenger Boarding Bridges and include all parts, mounting hardware, and installation instructions. Installation is also available through JBT AeroTech, Jetway Systems®.